Arduino Basics – BLINK

Name: _____

This diagram shows the setup for the blink program. The regions in the code are indicated on the right.

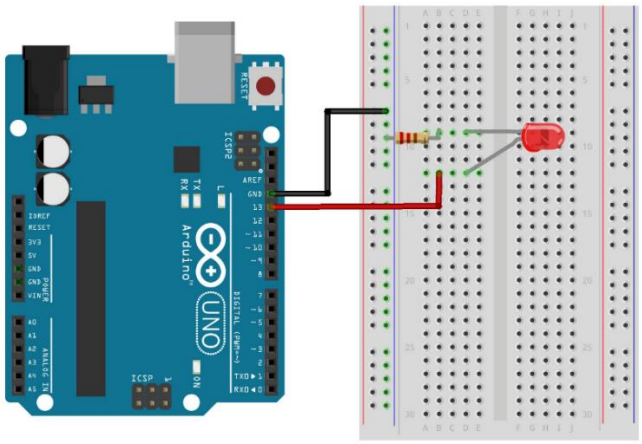

```
int pin = 13;

void setup() {
  pinMode(pin, OUTPUT);
}

void loop() {
  analogWrite(pin, 255);
  delay(1000);
  analogWrite(pin, 0);
  delay(1000);
}
```

Global

SetUp Method

Loop Method

1. Where are these lines of code found?

(a)	delay(1000);	Global	Set Up Method	Loop Method
(b)	int pin = 13;	Global	Set Up Method	Loop Method
(c)	pinMode(pin, OUTPUT);	Global	Set Up Method	Loop Method
(d)	analogWrite(pin, 255);	Global	Set Up Method	Loop Method

2. Add in the semi colons.

```
int pin = 13
int pin2 = 11

void setup() {
  pinMode(pin, OUTPUT)
  pinMode(pin2, OUTPUT)
}

void loop() {
  analogWrite(pin, 255)
  analogWrite(pin2, 210)
}
```

3. Add in the curly braces { }

```
int lightLocation = 5;

void setup()
  pinMode(lightLocation, OUTPUT);


void loop()
  analogWrite(lightLocation, 255);
  delay(30);
  analogWrite(lightLocation, 0);
  delay(100);
```

4. Circle **and correct** five errors in each set of code.

```
int pin = 5;

void set() {
  pinMode(pin, OUTPUT)


void () {
  analogWrite(pin, 255);
  delay(1000);
  analogWrite(, 0);
  delay(1000);
}
```

```
int input = 3

void setup {
  pinMode(input);
}

moid loop() {
  analogWrite(input, 128);
  delay();
  analogWrite(input, 255);
  delay(500);
}
```

5. Variables can be created in the global location. We are going to use "int" variables which are integers. For the variables shown, find out their information.

	Global line of code	Starting Value	Name
(a)	`int pin = 5;`		
(b)	`int apple = 234;`		
(c)	`int input = 9;`		

6. Match the line of the code with the description. Put the letter in the first column.

	`int pin = 13;`		a) A method which holds the code to start things off.
	`void setup() { }`		b) Code that sets the pin location to output.
	`pinMode(pin, OUTPUT);`		c) Makes an int variable. Sets it to location 13.
	`void loop() { }`		d) Code that makes the pin location show a bright light.
	`analogWrite(pin, 255);`		e) Pauses for 1000 ms.
	`analogWrite(pin, 0);`		f) A method that repeats over and over.
	`delay(1000);`		g) Code that makes the pin location show no light.

7. Put the code in order. (1 is first, 6 is last)

	`analogWrite(pin, 0);`
	`delay(1000);`
	`}`

	`pinMode(pin, OUTPUT);` `}`
	`void loop() {`
	`void setup() {`
	`analogWrite(pin, 255);` `delay(1000);`
	`int pin = 13;`

8. This is the code to make the light have a candle-like flicker.

(a) Add in the semi-colons.

```
int pin = 13

void setup() {
  pinMode(pin, OUTPUT)
}

void loop() {
  analogWrite(pin, 255)
  delay(rand() % 100 + 20)
  analogWrite(pin, 0)
  delay(rand() % 100 + 20)
}
```

It uses a random length delay: rand() % 100 + 20

- The numbers start at 20, and continue for 100 numbers.
- The range is 20 to 120

(b) Fill in the following table:

	Code	Range
(a)	rand() % 100 + 20	20-120
(b)	rand() % 50 + 10	
(c)	rand() % 100 + 300	
(d)	rand() % 20 + 80	